Hillmar
Hillmar Industries Ltd.
7371 Vantage Way
Delta, BC V4G 1C9
P:604 946-7115 F:604 946-0329
info@hillmar.com www.hillmar.com

COUPLING RKMWD
RKMWD-170-LSH-0450-20-2850
SPECIFICATION SHEET
SLS & MKTG
ENGLISH

Sheet Number:	
Job Number:	
Form Number:	429-690-76555PT

Company / Project Reference:	Date.:	Page.:	Document Package No.:	Rev.:
		1 OF 1		

Inventor Drawing

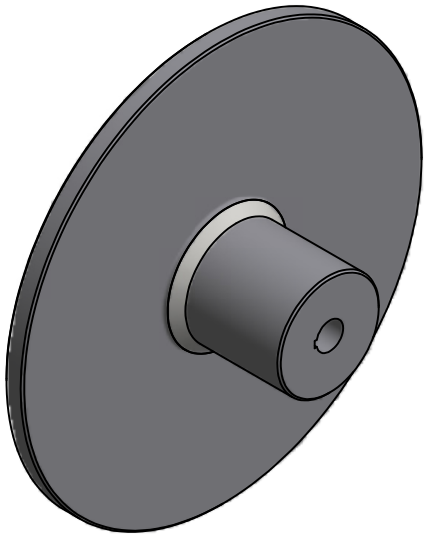

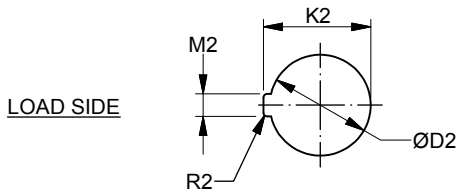

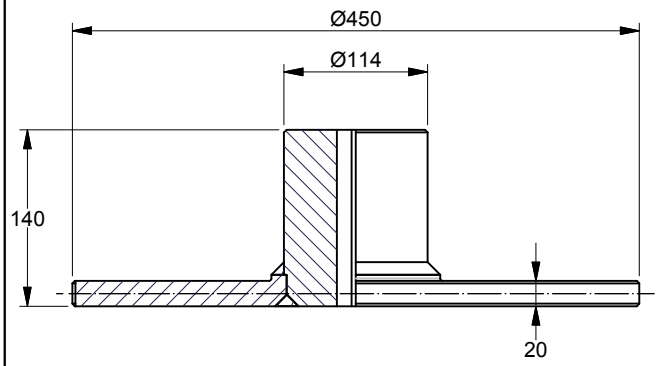

FEATURE	CODE
Rigid coupling	RKMWD
Coupling size (Hub OD)	170
Load side	LSH
Disc diameter (mm)	0450
Disc thickness (mm)	20
Maximum coupling torque (Nm)	2850

Example for ordering	RKMWD-170-LSH-0450-20-2850

TECHNICAL DATA

Disc model	SDWD-0450-20
Disc diameter (mm)	450
Hub bore size MIN. (mm)	30
D2 MAX. (mm)	70
Moment of inertia (kgm^2)	0.645
MAX. coupling torque TkMAX (Nm)	2850
MAX. coupling speed (RPM)	1650
Weight (kg)	31.7

CUSTOMER SPECIFICATIONS

Load side
D2:_____mm
M2:_____mm
K2:_____mm
R2:_____mm
C2:_____mm

NOTES

Coupling balancing grade ISO 1940-G6.3 is guaranteed for all coupling parts.

All figures are nominal figures only

All dimensions are in millimeters

Document Template #710-101-62058

** ALL TECHNICAL DATA IS SUBJECT TO CHANGE WITHOUT NOTICE **
Hillmar works have a fully registered ISO 9001-2008 quality assurance programme (QCB #01-1525)

C:\TEMP\a3f49bb3-e10c-4cd0-aed8-26c1c4c1b337\8000052841 2\HILLMAR\HILLMAR PRODUCTION\04 THRUSTER DB\0700-4\07004005 PKM-GKM-RKSM-RKX\SPC-SHT-PKM-GKM-RKSM-RKX\04 RKX\76555 RKMWD-170-LSH-0450-20-2850.idw